VOLTARIS METERING

Datasheet

VDT45M

THREE PHASE CT OPERATED ENERGY METER

The VDT45M energy meter supports three phase and single phase loads using current transformers with a 1A or 5A secondary. This MID Approved meter can be used for billing applications and is highly accurate, class C (Cl. 0.5). It measures bi-directional energy, voltage, current, active power, reactive power, apparent power and power factor.

It provides an RS485 communication interface supporting Modbus and features a clear LCD screen. The touch key allows easy viewing of parameters and setup operations while the password protection function ensures data security.



KEY FEATURES

- **CLASS C (±0.5%)** High accuracy measurement
- **MID APPROVED** Suitable for billing applications
- **RS485 MODBUS** BMS & Energy Management
- **PULSE OUTPUT** For active or reactive energy
- **BI-DIRECTIONAL** Import & export energy

TECHNICAL DATA

Supply voltage	85 to 300 V AC
Rated voltage (U_n)	230/400V AC
Operational voltage	L-N: 30 to 300V AC; L-L: 30 to 500V AC
PT1 (Primary)	30 to 500,000V
Overload capacity (V)	2 x Un for 1 sec.
Rated current (I_b)	5A
Max. current (I_{max})	6A
Min. current (I_{min})	0.05A
Overload capacity (I)	20 x I_{max} for 0.5 sec.
Frequency	45 to 65Hz
Power consumption	<4VA/0.5W
Pulse constant	5000 imp/kWh
Display	LCD with backlight
Max. energy reading	9999999.9 kWh / kVArh
Measurement type	3P4W, 3P3W, 2P3W, 1P2W

MEASURED PARAMETERS

Energy	Total Active Power
Total Active Energy	Total Reactive Power
Import Active Energy	Total Apparent Power
Export Active Energy	**Power Quality**
Total Reactive Energy	Total Harmonic Distortion (Voltage L-N)
Import Reactive Energy	Total Harmonic Distortion (Voltage L-L)
Export Reactive Energy	Total Harmonic Distortion (Current per Phase)
Voltage	Power Factor
Live to Neutral Voltage (L-N)	Power Factor per Phase
Live to Live Voltage (L-L)	Frequency
Current	**Maximum Demand**
Current per Phase	Maximum Demand Current per Phase
Power	Maximum Demand Total Active Power
Active Power per Phase	Maximum Demand Total Reactive Power
Reactive Power per Phase	Maximum Demand Total Apparent Power
Apparent Power per Phase	

COMPLETE THE SOLUTION WITH

Our VCT range of current transformers offers high accuracy and reliability when used with the VDT45M energy meter, ensuring precise measurement and dependable performance.



VCT24

- Primaries of 100A-300A
- 5A Secondary
- 24mm aperture
- Class 1 accuracy



VCT36

- Primaries of 100A-600A
- 5A Secondary
- 36mm aperture
- Class 1 accuracy

VOLTARIS METERING

Datasheet

ACCURACY

Voltage, Current	±0.5%
Active power	±0.5%
Reactive power	±2.0%
Apparent power	±0.5%
Active energy	±0.5%
Reactive energy	±2.0%
Power factor	±0.5%
Frequency	±0.1%

ENVIRONMENTAL

Operating temp.	-25 to +55ºC
Storage temp.	-40 to +80ºC
Humidity	< 90% non - condensing
Pollution degree	2
Altitude	Up to 2000m
Vibration	10 Hz to 150Hz, IEC 60068-2-6
IP protection	IP51 front display IP30 meter body

ELECTROMAGNETIC

Electrostatic discharge	±8kV (contact) ±15kV (air)
Immunity to radiated fields	10V/m. 80 - 2000MHz
Immunity to electrical fast transients	±4kV
Immunity to surges	±4kV
Immunity to conducted disturbances	10V. 0.15-80MHz
Immunity to magnetic fields	IEC 61000-4-8
Immunity to voltage dips	IEC 61000-4-11
Radiated emissions	Class B (EN55011)
Conducted emissions	Class B (EN55011)

SAFETY

Overvoltage category	CAT III (IEC 61010-1)
Measurement category	CAT III (IEC 61010-1)
Insulation	AC Voltage Test： 4kV for 1 min.
Protective class	II (IEC61010-1)

COMMUNICATION

Interfaces & Protocols	2-wire RS485, Modbus
Baud rate	1200 to 38400 bps
Parity bit	None, Even, Odd
Stop bit	1 or 2
Response time	< 100ms
Transmission mode	half-duplex
Transmission distance	Up to 1000m
Max. Bus loading	64 pc

PULSE OUTPUT

Interface type	Open collector opto-coupler
Pulse constant	Per pulse equal 0.001/ 0.01/0.1/1 kWh/kVArh
Pulse width	60 / 100 / 200 milliseconds
Pulse output type	Active energy / Reactive energy
Class	Class A (IEC 62053-31)
Input voltage	5 to 27 VDC

DIMENSIONS

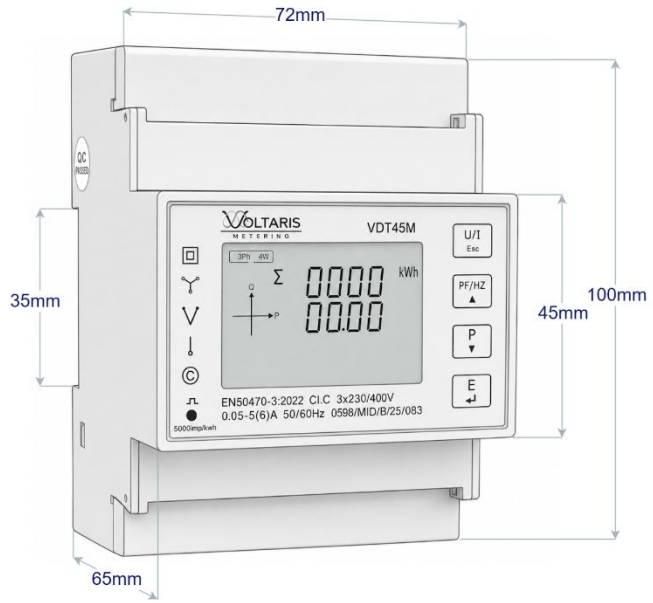

WIRING

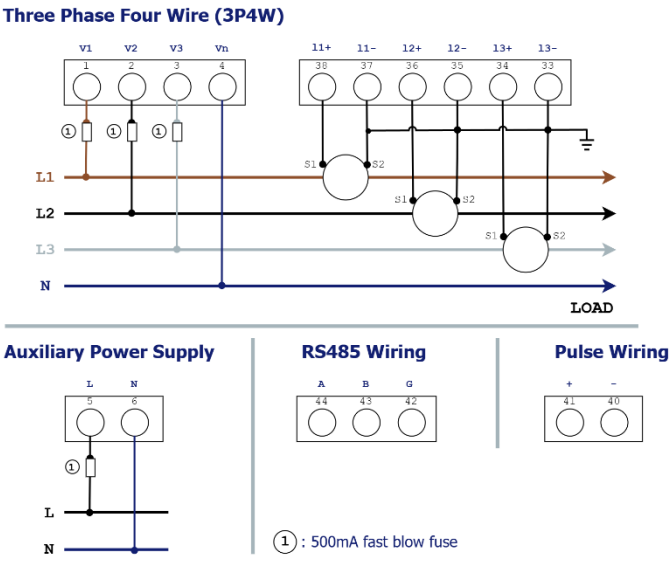

ADDITIONAL LITERATURE

User Manual
Click here

Installation Guide
Click here

Modbus Protocol
Click here

MID Certificate
Click here